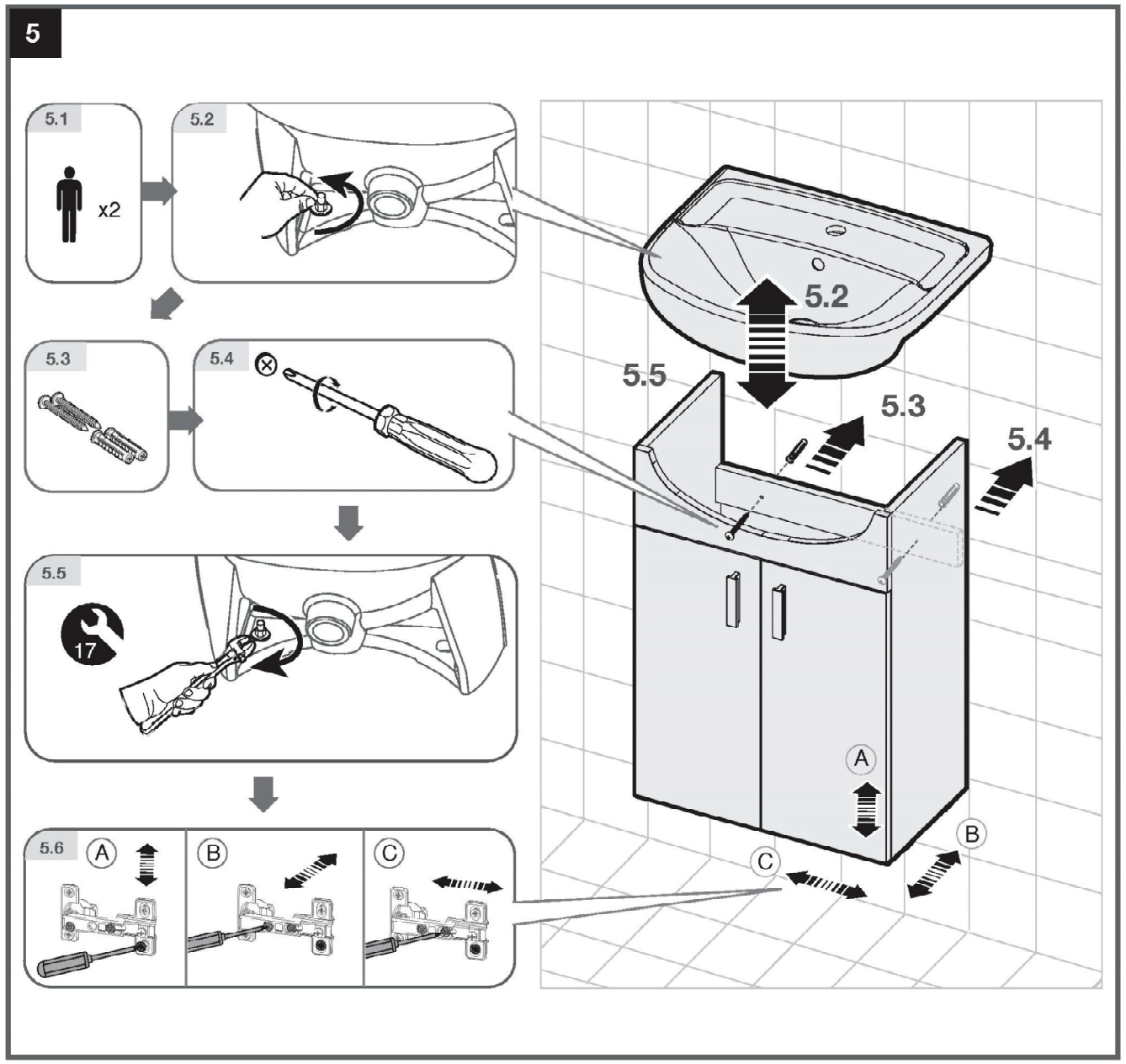

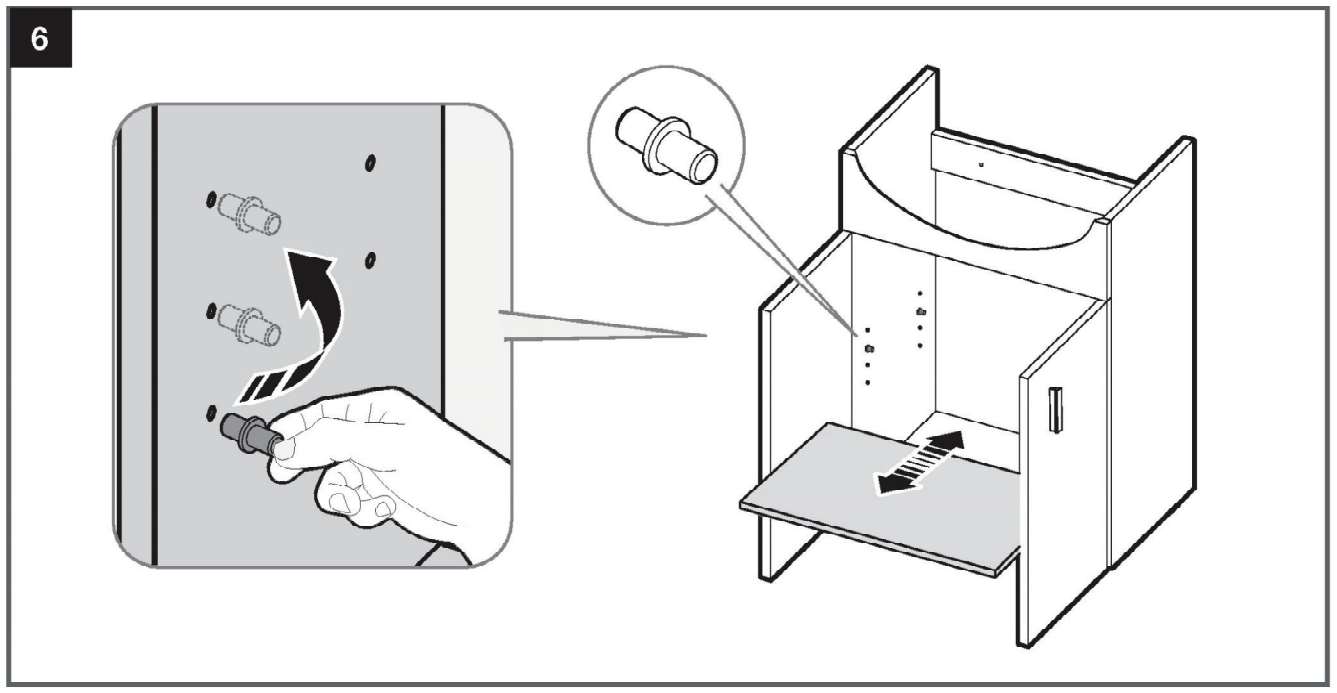

Q40600025

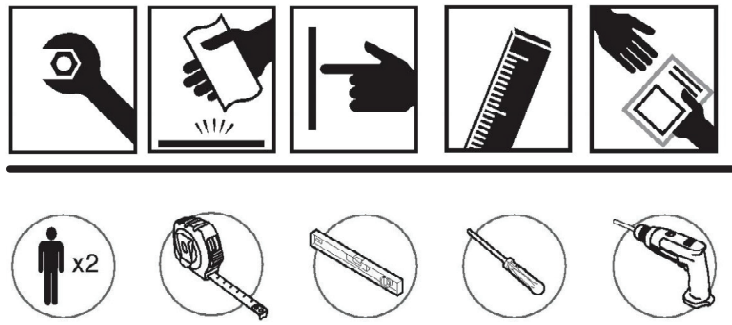

JIKA

LYRA Pack

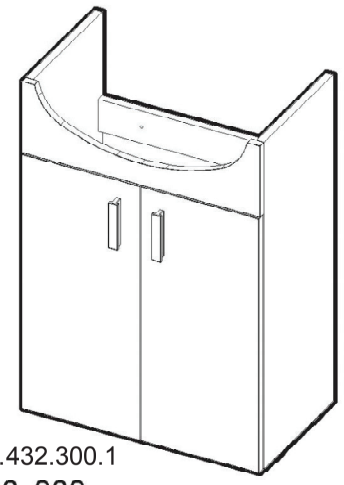

4.5195.1.432.300.1
502x709x292

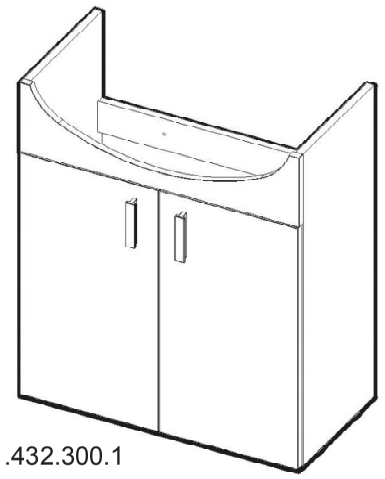

4.5196.1.432.300.1
608x699x310

4.5195.1.432.300.1	x 2	x 1	x 1
4.5196.1.432.300.1	x 2	x 1	x 1

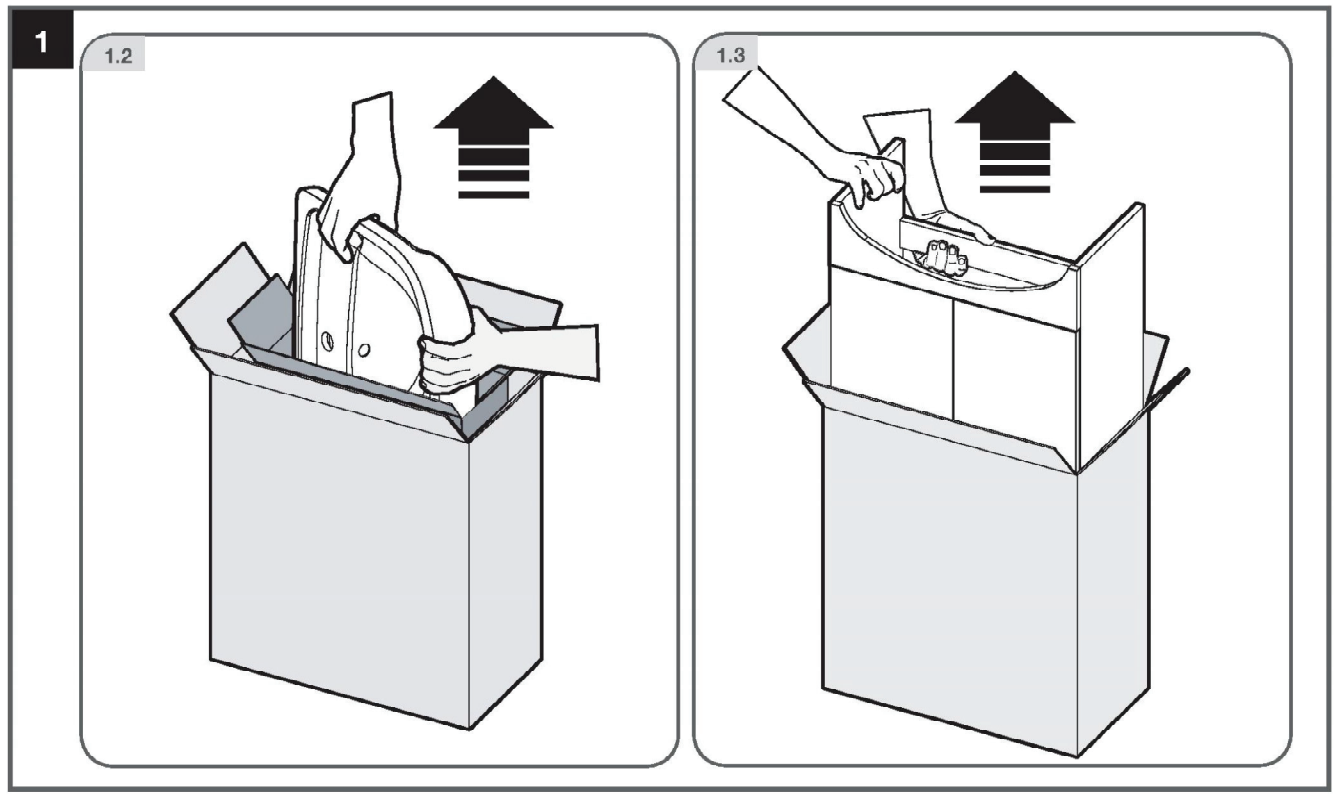

2

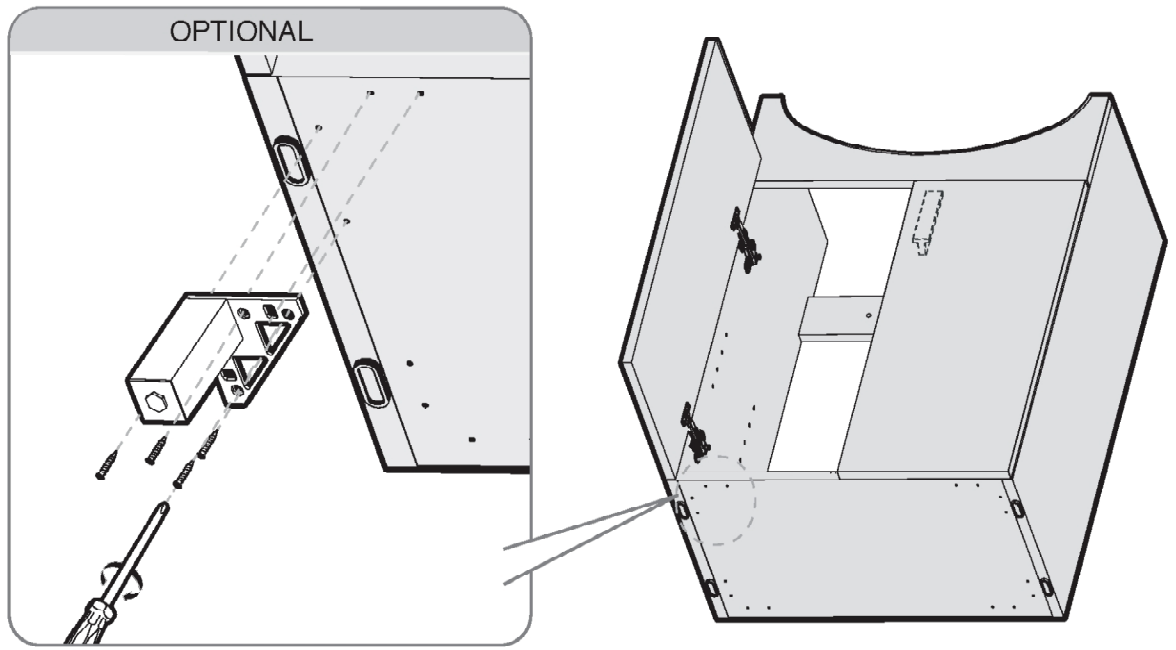

3

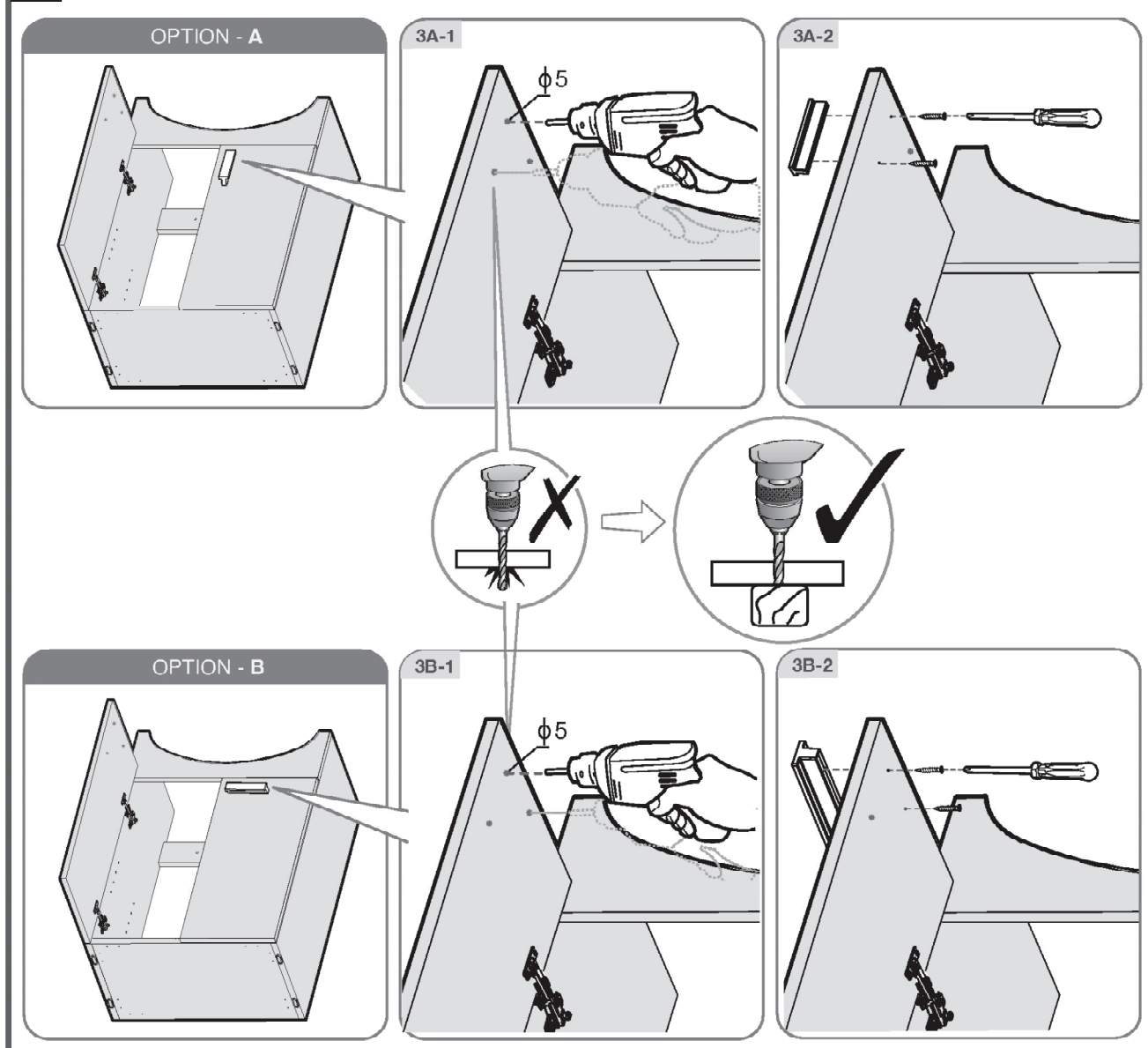

4

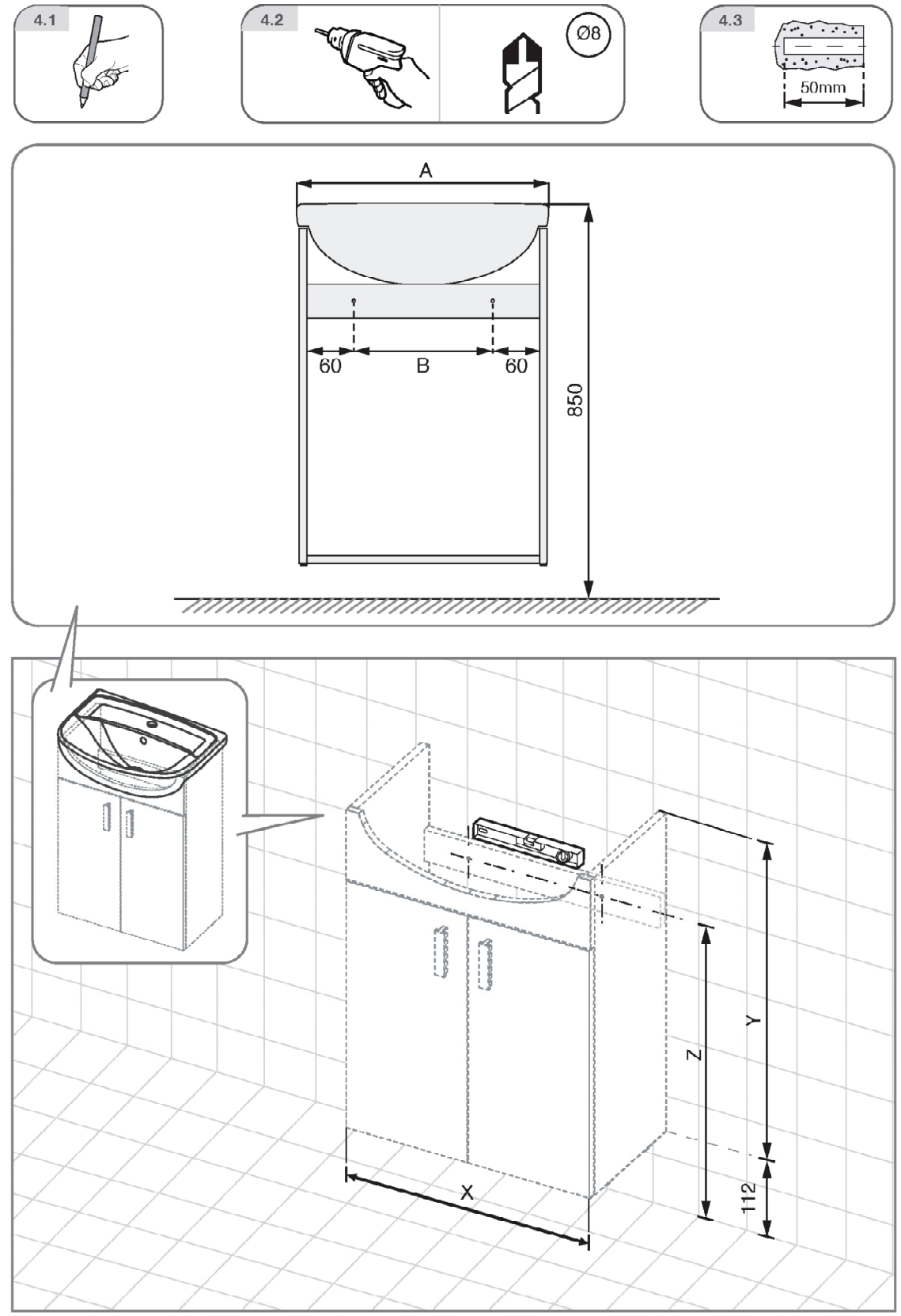

	A	B	X	Y	Z
4.5195.1.432.300.1	530	350	502	709	606
4.5196.1.432.300.1	650	456	608	699	583